General

The JoBo2.0A is a CANopen I/O unit especially designed for joystick applications. It provides input channels for 6 analog axes based on potentiometers or hall sensor ICs. The analog axes can be programmed to various operation modes such as standard axes with dead band in zero position, sliders or standard analog input.
All analog input channels may be calibrated to adapt the JoBo2.0A to a costumer hardware.
Additionally the JoBo2.0A provides up to 12 digital inputs for push buttons, switches etc.
4 channels may be used as LED output channels with PWM feature for dimming. A series resistor of 390 Ohms is already on board.

The CAN interface comes without galvanic isolation.
CANopen is available according to DS301 and DS401.
All usual baud rates up to 1 Mbit/s are supported.
The node ID and CAN baud rate may be set with DIP switches or may be set using the CAN interface.

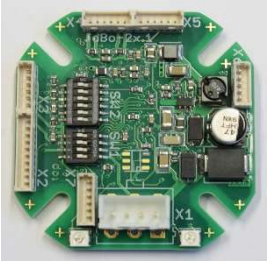
JoBo2.0A
(JST)

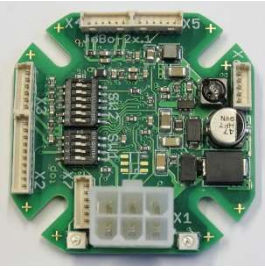
JoBo2.0A
(Molex)

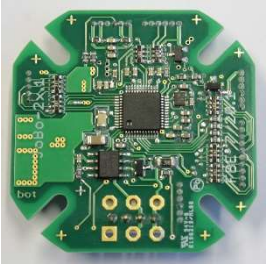
JoBo2.0A
(back)

Features

- 12 digital input lines
- 4 LED output channels with PWM feature
- 6 analog input lines
- Supply: +24 V DC
- Operating temperature -40...+70 °C

CANopen Features

- CAN baud rates up to 1 Mbit/s
- CAN bus ISO11898 with Transceiver TJA1050
- 4 Transmit- and 4 Receive-PDO
- Dynamic PDO Mapping
- Variable PDO Identifier
- CANopen PDO transfer modes: synchronous, asynchronous, event triggered, cyclic, acyclic and RTR
- Event Timer and Inhibit Timer for all Transmit-PDO
- Node-Guarding, Lifeguarding und Heartbeat
- Emergency messages
- Minimum Boot-Up

Ordering information

Part	Order number
JoBo2.0A-JST	EZ00000.2082.01
6 analog inputs, 12 button inputs/4 LED outputs Connector JST B4B-XH-A, -40...+70 °C	
JoBo2.0A-MMF	EZ00000.2083.01
6 analog inputs, 12 button inputs/4 LED outputs Connector Molex MINIFIT JR-6, -40...+70 °C	

Technical data

It is possible to connect hall-sensors or potentiometers to X2/3/4.
X3 is one group, X4 is the second group and X5 is the third group.
All groups are usable for redundant axis connection.

For potentiometers use connectors with 47 ohm resistor,
for hall sensors use connectors without resistor.

Mixed usage of potentiometers and hall sensors is possible, but
do not mix hall sensor and potentiometer in the same group!

CAN bus sub-system is **not (!)** isolated.

Power supply System	**Min.**	**Norm.**	**Max.**
Supply voltage System/Bus		+24 V DC	
Current consumption System/Bus			
Supply voltage I/O			
CAN bus Norm	ISO11898		
CiA Draft Standards	DS301 Version 4.0 and DS401 Version 2.0		
Conformance declaration	CE		
MTBF			

Digital inputs	
Number of inputs	12 designed for connecting push buttons or switches
Signal level LOW	TTL
Signal level HIGH	TTL
Debounce time	Software programmable

Digital outputs	
Number of outputs	4 designed for connecting LEDs (series resistor of 390 Ohms on board)
Max. output current	12 mA
Output polarity	Acive low

Analog inputs	
Number of inputs	6
Resolution	12 Bit

Connectors and dimensions	
Connectors	Moles pin header 53047-0510 Molex pin header 53047-0610, Molex pin header 53047-1010, Molex pin header 39-28-1063 or JST pin header B4B-XH-A
Cable cross-section [mm²]	0.08...1.5 mm² (flexible)
Cable cross-section [AWG]	26...14 AWG (flexible)
Dimensions housing	approx. 44 x 44 x 10 mm (see picture “dimensions”!)
Operating temperature	-40...+70 °C

Connectors assignment

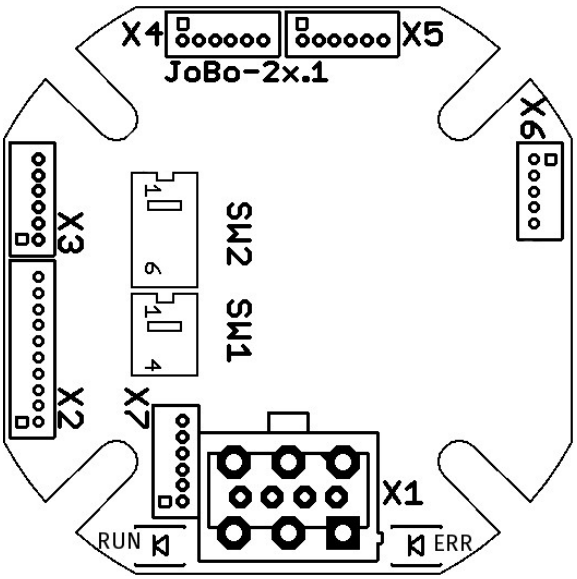

Connector X1 (supply/CAN)

The JoBo2.0A is available with 2 different connectors for power supply and CAN bus line.

4-pin header JST B4B-XH-A

Pin-No.	Name	Description
1	PWR	+24 V DC
2	GND	Ground
3	CANH	CAN High
4	CANL	CAN Low

This connector is recommended for usage, if the JoBo2.0A is connected internally in a joystick cup to a customer connector type.

6-pin header Molex 39-28-1063

Pin-No.	Name	Description
1	GND	Ground
2, 5	CANH	CAN High
3, 6	CANL	CAN Low
4	PWR	+24 V DC

This connector is recommended for usage, if the joystick shall be connected directly through the cup without the need of cable adapters.

Connector X3/X4/X5 (axis 0...5)

Pin-No.	Name	Description
1	PH-	Ground hall (no 47 ohm)
2	PP-	Ground poti (47 ohm)
3	AINx	Analog input AIN0 (X3)/AIN2 (X4)/ AIN4 (X5)
4	AINx	Analog input AIN1 (X3)/AIN3 (X4)/ AIN5 (X5)
5	PP+	Pos. poti (+5 V DC (with 47 ohm))
6	PH+	Pos. hall (+5 V DC (without 47 ohm))

Connector X2 (buttons/LED)

Pin-No.	Name	Description
1	GND	Ground
2...5	DINx	Digital inputs 4...7
6...9	IOx	Digital inputs 8...11/ LED outputs: IO8: IN8 or OUT3 IO9: IN9 or OUT2 IO10: IN10 or OUT1 IO11: IN11 or OUT0
10	V_{CC}	+5 V DC

Connector X6 (buttons)

Pin-No.	Name	Description
1	GND	Ground
2...5	DINx	Digital inputs 0...3

Connector X7 (Firmware)

Pin-No.	Name	Description
1	RST#	Reset (low active)
2	SIN	Serial input
3	SOT	Serial output
4	FU#	Firmware update (low active)
5	GND	Ground
6	V_{CC}	+5 V DC

Configuration Dip-Switch

Switch Number										Description
4-DIP				6-DIP						
4	3	2	1	6	5	4	3	2	1	
RT										RT Termination CAN-Bus
	BD0	BD1	BD2							BDx Baud rate CAN-Bus
				ID5	ID4	ID3	ID2	ID1	ID0	IDx Select Node-ID
ON										CAN-Termination on (120 Ohm)
OFF										CAN-Termination off
	OFF	OFF	OFF							1 MBit/s
	ON	OFF	OFF							800 kBit/s
	OFF	ON	OFF							500 kBit/s
	ON	ON	OFF							250 kBit/s
	OFF	OFF	ON							125 kBit/s
	ON	OFF	ON							50 kBit/s
	OFF	ON	ON							20 kBit/s
	ON	ON	ON							Reserved
				OFF	OFF	OFF	OFF	OFF	OFF	Setting of Node-ID and CAN baud rate using object 3000
				OFF	OFF	OFF	OFF	OFF	ON	Node-ID = 1
				OFF	OFF	OFF	OFF	ON	OFF	Node-ID = 2
				OFF	OFF	OFF	OFF	ON	ON	Node-ID = 3
				...	...	...	...	...	...	...
				ON	ON	ON	ON	OFF	OFF	Node-ID = 60
				ON	ON	ON	ON	OFF	ON	Node-ID = 61
				ON	ON	ON	ON	ON	OFF	Node-ID = 62
				ON	ON	ON	ON	ON	ON	Node-ID = 63

CAN Signal-LED

States are coded according to DRP303-3.

LED	Color	Description	
RUN-LED	green	off	no supply or faulty
		flickering	CAN not started
		flashing	Stopped
		blinking	Preoperational
		on	Operational
ERR-LED	red	off	no error
		1x flashing	CAN module in Error Warning State
		2x flashing	Node-Guarding error
		on	Bus-Off

Dimensions

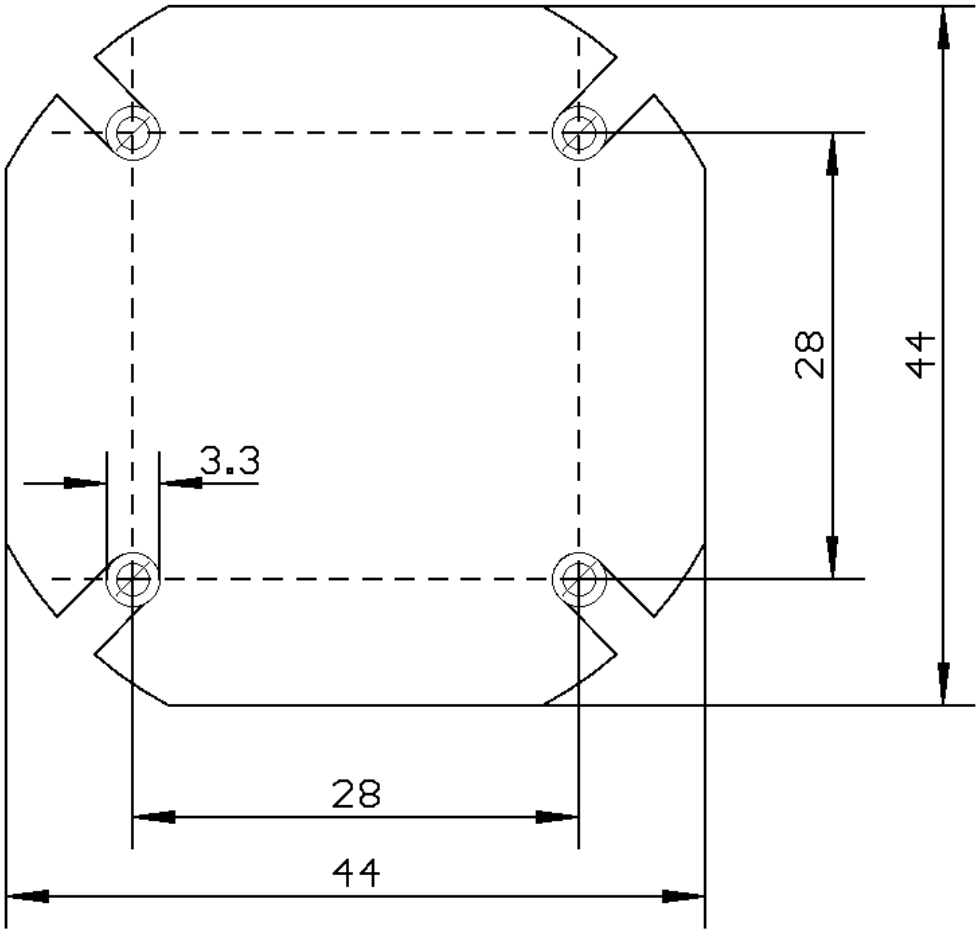

All measurements in mm

CANopen Object Dictionary

DS301: global objects

Index	Sub-Index	Name	Access
0005	-	Dummy 8	r/o
0006	-	Dummy 16	r/o
0007	-	Dummy 32	r/o
1000	-	Device Type	r/o
1001	-	Error Register	r/o
1002	-	Manufacturer Status Register	r/o
1005	-	COB-ID SYNC	r/o
1008	-	Device Name	r/o
1009	-	Hardware Version	r/o
100A	-	Software Version	r/o
100C	-	Guard Time	r/w
100D	-	Life Time Factor	r/w
100E	-	COB-ID Guard	-
1010	0	Store Parameter Field	ro
	1	Save all Parameter	r/w
	2	Save Communication Parameter	r/w
	3	Save Application Parameter	r/w
1011	0	Restore Default Parameter	ro
	1	Restore all Default Parameter	r/w
1014	-	COB ID Emergency	r/w
1015	-	Inhibit Time Emergency	r/w
1016	0	Consumer Heartbeat Time	r/o
	1	Consumer Heartbeat Time 1	r/w
	2	Consumer Heartbeat Time 2	r/w
	3	Consumer Heartbeat Time 3	r/w
	4	Consumer Heartbeat Time 4	r/w
1017	-	Producer Heartbeat Time	r/w
1018	0	Identity Object	r/o
	1	Vendor ID	r/o
	2	Product Code	r/o
	3	Revision Number	r/o
	4	Serial Number	r/o
1029		Error Behavior Object	r/o
	1	Communication error	r/w
	2	Application error	r/w

All index values are hexadecimal. Values in tables are hexadecimal (0x...) or decimal.

r/o read only
w/o write only
r/w read and write

All visible string data types are 20 characters at max.

DS301: PDO Parameter objects

Description of PDO Parameter. With these indexes, dynamic PDO-Mapping, free selection of IDs, transmission type, inhibit and event time is possible. These settings are selectable in “operational” as well as “preoperational” mode.

Index	Sub-Index	Name	Access
1400	0	Receive-PDO1 Communication Parameter	r/o
	1	COB-ID	r/w
	2	Transmission Type	r/w
1401...1403		Receive-PDO2 to RPDO4 Communication Parameter same as 1400	r/w
1600	0	Receive-PDO1 Parameter mapping	r/w
	1 to n	Mapped objects (max. 8 objects mappable)	r/w
1601...1603		Receive-PDO2 to RPDO4 Parameter mapping same as 1600	r/w
1800	0	Transmit-PDO1 Communication Parameter	r/o
	1	COB-ID	r/w
	2	Transmission Type	r/w
	3	Inhibit Time	r/w
	4	Reserved	r/w
	5	Event Time	r/w
1801...1803		Transmit-PDO2 to TPDO4 Communication Parameter same as 1800	r/w
1A00	0	Transmit-PDO1 Parameter mapping	r/w
	1 to n	Mapped objects (max. 8 objects mappable)	r/w
1A01...1A03		Transmit-PDO2 to TPDO4 Parameter mapping same as 1A00	r/w

Specific objects

Index	Sub-Index	Name	Access
2000	-	Device Manufacturer	r/o
2009	0	Serial Number 64 Bit	r/o
	1	Serial Number 64 Bit LSDW	r/o
	2	Serial Number 64 Bit MSDW	r/o
2101	-	System Configuration	r/o
2102	-	Remapping Enabled Info	r/o
2103	-	Enable Guarding Warning	r/w
2105	-	Internal API State	r/o
2110	0	Conformance Test Object	r/o
	1	Range Check Object	r/w
2180	-	CAN Restart Time	r/w
2FFF	-	Factory Test Object	r/w

DS401: digital inputs

Index	Sub-Index	Name	Access
5001	0 to n	Digital input debounce time	r/w
6000	0 to n	Read digital input 8 bit	r/o
6002	0 to n	Polarity input 8 bit	r/w
6005	-	Global Interrupt Enable	r/w
6006	0 to n	Interrupt Mask Any Change	r/w
6007	0 to n	Interrupt Mask Rising Edge	r/w
6008	0 to n	Interrupt Mask Falling Edge	r/w
6100	0 to n	Read Digital Input 16 Bit	r/o
6120	0 to n	Read Digital Input 32 Bit	r/o

DS401: digital outputs

Index	Sub-Index	Name	Access
5200	-	Reset Output Object on Error	r/w
6200	0 to n	Write Output 8 Bit	r/w
6206	0 to n	Error Mode Output	r/w
6207	0 to n	Error State Output	r/w
6300	0 to n	Write Digital Output 16 Bit	wo
6320	0 to n	Write Digital Output 32 Bit	wo

DS401: analog inputs

Index	Sub-Index	Name	Access
5301	-	Axis input filter time	r/w
5320	-	Axis full scale value	r/w
5380	0 to n	Axis ADC Raw Data	r/o
53F0	-	Axis error	r/o
6401	0 to n	Analog Input 16 Bit	r/w
6421	0 to n	Analog Input Trigger Selection	r/w
6423	-	Analog Interrupt Enable	r/w
6424	0 to n	Analog Input Interrupt Upper Limit	r/w
6425	0 to n	Analog Input Interrupt Lower Limit	r/w
6426	0 to n	Analog Input Interrupt Delta	r/w
6427	0 to n	Analog Input Interrupt Negative Delta	r/w
6428	0 to n	Analog Input Interrupt Positive Delta	r/w

PWM

Index	Sub-Index	Name	Zugriff
5100	1 to n	PWM LED Output Duty	r/w

JoBo configuration

Index	Sub-Index	Name	Access
5F00 [1)]	1 to n	Analog Input Channel Operation Mode	r/w
5F02 [1)]	-	Analog Input Dead Zone Center Position	r/w
5F03 [1)]	-	Analog Input Dead Zone Edge Position	r/w
5F04 [1)]	-	Default Value Analog Full Scale Value	r/w
5F08	1 to n	Axis Calibration Info P	r/o
5F09	1 to n	Axis Calibration Info Z	r/o
5F0A	1 to n	Axis Calibration Info N	r/o
5F0C [1)]	-	Digital I/O Configuration	r/w
5F10 [1)]	-	CAN Protocol	r/w
5F20 [1)]	-	CANopen Options	r/w
5F21 [1)]	-	CANopen TPDO Default Mapping	r/w
5F22 [1)]	1 to n	CANopen TPDO Default Event Time	r/w
5FF0	-	Configuration Enable	r/w
5FF1 [1)]	-	Configuration Command	w/o
5FFC		Configuration Status	r/o

[1)] These objects are normally hidden and are only available, if the value 0x62616E65 (signature “enab”) is written to the Configuration Enable Object 5FF0

Object dictionary (description)

Following comes a short description of every dictionary entry.

DS301: Global objects

Index 0005

Dummy for spaces in PDO mapping (8-bit length).
Can be used, more than once.

Index	0005
Name	Dummy 8
Description	
Data Type	Unsigned 8
Access	r/o
PDO Mapping	Yes
Value Range	-
Default Value	0

Index 0006

Dummy for spaces in PDO mapping (16-bit length).
Can be used, more than once.

Index	0006
Name	Dummy 16
Description	
Data Type	Unsigned 16
Access	r/o
PDO Mapping	Yes
Value Range	-
Default Value	0

Index 0007

Dummy for spaces in PDO mapping (32-bit length).
Can be used, more than once.

Index	0007
Name	Dummy 32
Description	
Data Type	Unsigned 32
Access	r/o
PDO Mapping	Yes
Value Range	-
Default Value	0

Index 1000: Device Type

This index contains a description of the device type. Within are encoded the CiA profile code and additional specifications of the device.

Index	1000
Name	Device Type
Description	-
Data Type	Unsigned 32
Access	r/o
PDO Mapping	No
Value Range	-
Default Value	0x0083 0191

Index 1001: Error Register

This index contains the internal error code in case of emergency.

Index	1001
Name	Error Register
Description	-
Data Type	Unsigned 8
Access	r/o
PDO Mapping	Yes
Value Range	-
Default Value	-

The error register is built as shown. If more than one error occur, the values are combined via logical OR.

Bit	Description
0	Common error. This bit is set with every error.
1	0
2	0
3	0
4	CAN bus or communication error
5	0
6	0
7	Device error

Index 1002: Status Register

This index contains additional status information of the device.

Index	1002
Name	Status Register
Description	-
Data Type	Unsigned 32
Access	r/o
PDO Mapping	Yes
Value Range	-
Default Value	-

Index 1005: COB-ID SYNC

This index sets the COB-ID for SYNC messages.

This device is a receiving device. SYNC production is not supported.

Index	1005
Name	COB-ID Sync
Description	-
Data Type	Unsigned 32
Access	r/w
PDO Mapping	No
Value Range	1...0x7FF
Default Value	0x80

Index 1008: Device Name

This index contains the device name as a visible string.

Index	1008
Name	Device Name
Description	-
Data Type	Visible String
Access	r/o
PDO Mapping	No
Value Range	The maximum string length is 20 characters
Default Value	“FBE Jobo-02”

Index 1009: Hardware Version

This index contains the revision code of the hardware as visible string.

Index	1009
Name	Hardware Version
Description	-
Data Type	Visible String
Access	r/o
PDO Mapping	No
Value Range	The maximum string length is 20 characters
Default Value	-

Index 100A: Software Version

This index contains the firmware version as visible string.

Index	100A
Name	Software Version
Description	-
Data Type	Visible String
Access	r/o
PDO Mapping	No
Value Range	The maximum string length is 20 characters
Default Value	-

Index 100C: Guard Time

Together with index 100D, this index represents the lifeguarding protocol. Values are in milliseconds.

Guard Time multiplied by Life Time Factor results in Life Time.

Set up 0 (zero), if not used.

Index	100C
Name	Guard Time
Description	-
Data Type	Unsigned 16
Access	r/w
PDO Mapping	No
Value Range	
Default Value	0

Index 100D: Life Time Factor

Together with index 100C, this index represents the lifeguarding protocol. Values are factors.

Guard Time multiplied by Life Time Factor results in Life Time.

Set up with 0 (zero), if not used.

Index	100D
Name	Life Time Factor
Description	-
Data Type	Unsigned 8
Access	r/w
PDO Mapping	No
Value Range	
Default Value	0

Index 100E: COB-ID Guard

This index contains the ID for guarding protocol.

Index	100E
Name	COB-ID Guard
Description	-
Data Type	Unsigned 32
Access	-
PDO Mapping	No
Value Range	-
Default Value	0x700 + Node-ID

Index 1010: Store Parameter Field

This index gives the possibility to save the settings of the module.

Index	1010
Name	Store Parameter Field
Description	-
Data Type	Structure

Saving the settings is only possible in „Pre-Operational“ state.
To execute the save sequence write the command „save“ to the matching index.

MSB LSB

e	v	a	s
0x65	0x76	0x61	0x73

Index	1010.00
Name	Number of indexes supported
Description	-
Data Type	Unsigned char
Access	ro
PDO Mapping	No
Value Range	-
Default Value	3

Save all settings

Index	1010.01
Name	Save all Parameters
Description	
Data Type	Unsigned 32
Access	r/w
PDO Mapping	No
Value Range	-
Default Value	-

Save communication settings only
(PDO settings etc.)

Index	1010.02
Name	Save Communication Parameters
Description	
Data Type	Unsigned 32
Access	r/w
PDO Mapping	No
Value Range	-
Default Value	-

Save application settings only
(Full Scale Value etc.)

Index	1010.03
Name	Save Application Parameters
Description	
Data Type	Unsigned 32
Access	r/w
PDO Mapping	No
Value Range	-
Default Value	-

Index 1011: Restore Default Parameter

This index gives the possibility to restore the default settings.

Index	1011
Name	Restore Default Parameter
Description	-
Data Type	Structure

Restoring the settings is only possible in „Pre-Operational“.
To execute the restore sequence write the command „load“ to the matching index and restart the module.

MSB LSB

d	a	o	l
0x64	0x61	0x6F	0x6C

Index	1011.00
Name	Number of indexes supported
Description	-
Data Type	Unsigned char
Access	ro
PDO Mapping	No
Value Range	-
Default Value	1

Restore all settings

Index	1011.01
Name	Restore all Default Parameter
Description	
Data Type	Unsigned 32
Access	r/w
PDO Mapping	No
Value Range	-
Default Value	-

Index 1014: COB-ID Emergency

This index sets the ID for emergency messages.

Index	1014
Name	COB-ID Emergency
Description	-
Data Type	Unsigned 32
Access	r/w
PDO Mapping	No
Value Range	-
Default Value	0x80 + Node-ID

Index 1015: Inhibit Time Emergency

This index sets up a delay for transmitting any emergency. This device supports a delay with an interval of one millisecond.

Index	1015
Name	Inhibit Time Emergency
Description	-
Data Type	Unsigned 16
Access	r/w
PDO Mapping	No
Value Range	-
Default Value	0 (disabled)

Index 1016: Consumer Heartbeat Time

Index 1016 is used to monitor the Heartbeat Consuming of up to four nodes.

Index	1016
Name	Consumer Heartbeat Time
Description	-
Data Type	Structure

Attention:
Heartbeat monitoring starts with the reception of the first heartbeat.
The Producer Time should be greater than the Consumer Time.
Ahead of the first heartbeat, the Producers status is unknown.

Index	1016.00
Name	Number of indexes supported
Description	-
Data Type	Unsigned 8
Access	r/o
PDO Mapping	No
Value Range	-
Default Value	4

Structure of the Consumer Heartbeat Time

MSB			LSB
Byte3	Byte2	Byte1	Byte0
Reserved	Node-ID	Heartbeat time	

Index	1016.01...1016.04
Name	Consumer Heartbeat Time 1...4
Description	-
Data Type	Unsigned 32
Access	r/w
PDO Mapping	No
Value Range	-
Default Value	0

Index 1017: Producer Heartbeat Time

This index sets up the heartbeat cycle in an interval of one millisecond.
If it is not used, set up 0 (zero).

Attention:
Use either Heartbeat or Node-Guarding. Both at once is not allowed.

Index	1017
Name	Producer Heartbeat Time
Description	-
Data Type	Unsigned 16
Access	r/w
PDO Mapping	No
Value Range	-
Default Value	0

Index 1018: Identity Object

This index contains common information about the device and the manufacturer,
frenzel + berg electronic GmbH & Co.KG.
It cannot be modified.

Index	1018
Name	Identity Object
Description	-
Data Type	Structure

Index	1018.00
Name	Number of indexes supported
Description	-
Data Type	Unsigned char
Access	r/o
PDO Mapping	No
Value Range	-
Default Value	4

Registration code of
frenzel + berg electronic GmbH & Co.KG at the CiA

Index	1018.01
Name	Vendor ID
Description	
Data Type	Unsigned 32
Access	r/o
PDO Mapping	No
Value Range	-
Default Value	0x58

Internal product code of the product at
frenzel + berg electronic GmbH & Co.KG

Index	1018.02
Name	Product Code
Description	
Data Type	Unsigned 32
Access	r/o
PDO Mapping	No
Value Range	-
Default Value	0x0000 0000

Index	1018.03
Name	Revision Code
Description	
Data Type	Unsigned 32
Access	r/o
PDO Mapping	No
Value Range	-
Default Value	Revision of the device

Index	1018.04
Name	Serial Number
Description	
Data Type	Unsigned 32
Access	r/o
PDO Mapping	No
Value Range	-
Default Value	0

Index 1029: Error Behavior

This index sets up whether the device switches its operating state in case of emergency, or not. Possible changes are Pre-Operational or Stopped. No change at all and keeping the current state is possible, too.

Index	1029
Name	Error Behavior Object
Description	-
Data Type	Structure

As communication error counts, e.g., Bus-Off, Heartbeat, Guarding or internal errors of the device.

Index	1029.00
Name	Number of indexes supported
Description	-
Data Type	Unsigned char
Access	r/o
PDO Mapping	No
Value Range	-
Default Value	2

The values of the states are as follows:

0	Pre-Operational (only if Operational)
1	no change
2	Stopped
3...255	reserved

Index	1029.01
Name	Communication Error
Description	NMT state change in case of communication error
Data Type	Unsigned 8
Access	r/w
PDO Mapping	No
Value Range	-
Default Value	0

Index	1029.02
Name	Application Error
Description	NMT state change in case of internal error due to hardware malfunction
Data Type	Unsigned 8
Access	r/w
PDO Mapping	No
Value Range	-
Default Value	0

DS301: PDO Parameter Objects

Communication Parameter Objects

The transmission type for Transmit- and Receive-PDO are set up with sub-index 2.

Type	PDO transmission				
	cyclic	acyclic	synchronous	asynchronous	RTR
0		X	X		
1-240	X		X		
241-251	Reserved				
252			X		X
253				X	X
254				X	
255				X	

The synchronous transmission types 0...240 and 252 are dependent on the SYNC signal. Asynchronous transmission is independent from the SYNC.
Type 0 is triggered by the SYNC, however, a transmission is only made, if the PDO data changes.
A value between 1 and 240 says the transmission is synchronous and cyclic. The transmission type represents the needed number of SYNCs for triggering the PDO.
Type 252 triggers a transmission with the next available SYNC, but only if a RTR releases the PDO.
Type 253 transmits the PDO immediately, however, only on RTR.
With type 254 and 255, the manufacturer or the device profile set the conditions.

An inhibit time can be set in sub-index 3. The PDO are triggered by their conditions, but only transmitted if the inhibit time is up. This time is set as a multiple of 100 µs, a value of 0 (zero) renders the function useless.
In mode 254/255, an additional Event Time is set. This timer running out is considered an event. The time is set as a multiple of 1 ms. This event triggers a PDO transmission in addition to other possible events.

Index 1400 is an example for Receive-PDO and index 1800 is an example for Transmit-PDO.

Index	PDO
1400...14xx	Receive-PDO1...Receive-PDOxx
1800...18xx	Transmit-PDO1...Transmit-PDOxx

Index	14xx/18xx
Name	Receive-/Transmit-PDOx Communication Parameters
Description	-
Data Type	Structure

Index	14xx.00/18xx.00
Name	Number of indexes supported
Description	-
Data Type	Unsigned 8
Access	r/o
PDO Mapping	No
Value Range	-
Default Value	2/5

1400.01	ID + 200	1800.01	ID + 180
1401.01	ID + 80000300	1801.01	ID + 280
1402.01	ID + 80000400	1802.01	ID + 380
1403.01	ID + 80000500	1803.01	ID + 80000480

The table shows the default PDO-ID.
An Identifier von 8xxxxxxx means the PDO is rendered inactive. The CAN master has to assign a valid PDO-ID.

Index	14xx.01/18xx.01
Name	COB-ID
Description	Identifier for CAN-Object for PDO
Data Type	Unsigned 32
Access	r/w
PDO Mapping	No
Value Range	-
Default Value	

See table on top of the chapter.

Index	14xx.02/18xx.02
Name	Transmission Type
Description	-
Data Type	Unsigned 8
Access	r/w
PDO Mapping	No
Value Range	-
Default Value	0xFF

Multiple of 1 µs.

Index	18xx.03
Name	Inhibit Time
Description	-
Data Type	Unsigned 16
Access	r/w
PDO Mapping	No
Value Range	-
Default Value	0

Index	18xx.04
Name	Reserved
Description	-
Data Type	-
Access	-
PDO Mapping	No
Value Range	-
Default Value	-

Multiple of 1 ms.

Index	18xx.05
Name	Event Time
Description	-
Data Type	Unsigned 16
Access	r/w
PDO Mapping	No
Value Range	-
Default Value	0

PDO mapping objects

The following table shows the PDO mapping entries. This is the same for all PDO. The mapping table is a linking index for entries of the object dictionary (e.g. data of digital outputs) and position in the PDO.

Sub-Index 0 gives the number of valid entries. The JoBo2.0A supports up to eight entries each PDO. In order to change the mapping, sub-index 0 has to be set to 0 (zero) first (inactive). Now the entries can be altered. If a new entry is mapped, the JoBo2.0A checks whether the entry is valid or not. Invalid entries result in an abort.

All eight sub-indexes are pointer to the entries. A value of 0 (zero) means no entry. The pointer's structure is:

MSB			LSB
Byte3	Byte2	Byte1	Byte0
mapped index		sub-index	Length

Index and sub-index combined are the pointer; Length is the data length of the pointer's target in bit.

Index	160x/1A0x
Name	Receive-/Transmit-PDO Mapping Parameters
Description	-
Data Type	Array

Index	160x/1A0x.00
Name	Number of indexes supported
Description	Number of mapped objects
Data Type	Unsigned 8
Access	r/w
PDO Mapping	No
Value Range	-
Default Value	See table below

Index	160x/1A0x.01...160x/1A0x.08
Name	Mapped object
Description	
Data Type	Unsigned 32
Access	r/w
PDO Mapping	No
Value Range	-
Default Value	See table below

Receive-PDO
The JoBo2.0A uses this default configuration for Receive-PDO.

Index	Entry	
Receive-PDO1		
1600.00	1	
1600.01	62000108	Digital outputs 0...3
Receive-PDO2		
1601.00	4	
1601.01	51000108	PWM LED 0
1601.02	51000208	PWM LED 1
1601.03	51000308	PWM LED 2
1601.04	51000408	PWM LED 3
Receive-PDO3		
1602.00	0	
Receive-PDO4		
1603.00	0	

Transmit-PDO
The JoBo2.0A uses this default configuration for Transmit-PDO.

Index	Entry	
Transmit-PDO1		
1A00.00	3	
1A00.01	60000108	Digital inputs 0...7
1A00.02	60000208	Digital inputs 8...11
1A00.03	53F00008	Axis Error
Transmit–PDO2		
1A01.00	4	
1A01.01	64010110	Analog input 0
1A01.02	64010210	Analog input 1
1A01.03	64010310	Analog input 2
1A01.04	64010410	Analog input 3
Transmit–PDO3		
1A02.00	2	
1A02.01	64010510	Analog input 4
1A02.02	64010610	Analog input 5
Transmit–PDO4		
1A03.00	0	

Specific Objects

Index 2000: Device Manufacturer

Index	2000
Name	Device Manufacturer
Description	-
Data Type	Visible String
Access	r/o
PDO Mapping	No
Value Range	The maximum string length is 20 characters
Default Value	„FRENZEL + BERG“

Index 2009: Serial Number 64 Bit

This index is contains the serial number of this device.

Index	2009
Name	Serial Number 64 Bit
Description	-
Data Type	Array

Index	2009.00
Name	Number of indexes supported
Description	-
Data Type	Unsigned 8
Access	r/o
PDO Mapping	No
Value Range	-
Default Value	2

Index	2009.01
Name	Serial Number Low Double Word
Description	Bits 0...31 of the serial number
Data Type	Unsigned 32
Access	r/o
PDO Mapping	No
Value Range	-
Default Value	-

Index	2009.02
Name	Serial Number High Double Word
Description	Bits 32...63 of the serial number
Data Type	Unsigned 32
Access	r/o
PDO Mapping	No
Value Range	-
Default Value	-

Index 2101: System Configuration

This index shows the current operating mode of the device.

Index	2101
Name	System Configuration
Description	-
Data Type	Unsigned 32
Access	r/o
PDO Mapping	No
Value Range	-
Default Value	0

Index 2102: Remapping Enabled Info

This index shows, whether remapping the PDO is allowed or prohibited.

0 = remapping prohibited
1 = remapping allowed

Index	2102
Name	Remapping Enabled Info
Description	-
Data Type	Unsigned 8
Access	r/o
PDO Mapping	No
Value Range	-
Default Value	1

Index 2103: Enabled Guarding Warning

This index enables an additional warning when Node-Guarding is used.

The CAN master is given an early report for an imminent Node-Guarding failure.
The warning is triggered when the Guard Time is up (Index 100C).
The NMT state remains unaffected.

Index	2103
Name	Enable Guarding Warning
Description	-
Data Type	Unsigned 8
Access	r/w
PDO Mapping	No
Value Range	-
Default Value	0

Index 2105: Internal Error Code

These are internal error messages of the CANopen controller.

Index	2105
Name	Internal Error Code
Description	-
Data Type	Unsigned 32
Access	r/o
PDO Mapping	Yes
Value Range	-
Default Value	0 (no error condition)

Index 2110: Test Object

This index is for internal test purposes only. It possesses no function and is not to use.

Index	2110
Name	Test Object 01
Description	-
Data Type	Structure

Index	2110.00
Name	Number of indexes supported
Description	-
Data Type	Unsigned char
Access	r/o
PDO Mapping	No
Value Range	-
Default Value	1

Index	2110.01
Name	Range Check Object
Description	-
Data Type	Unsigned 16
Access	r/w
PDO Mapping	No
Value Range	100...1000
Default Value	500

Index 2180: CAN Restart Time

With this index, the restart time for the CAN communication in case of a Bus-Off error is defined. The value is set in milliseconds.

0 (zero) disables this function.

Index	2180
Name	CAN Restart Time
Description	-
Data Type	Unsigned 16
Access	r/w
PDO Mapping	No
Value Range	0...50000
Default Value	1000 (restart after one second)

Index 2FFF: Factory Test Object

For internal use at FBE only.

Do not use!

Index	2FFF
Name	Factory Test Object
Description	-
Data Type	Unsigned 32
Access	r/w
PDO Mapping	No
Value Range	
Default Value	

DS401: digital inputs

Index 5001: Digital Input Debounce Time

This index sets the debounce time for the digital inputs.
The time is set for each input byte (max. 8 inputs) separately.

Index	6000
Name	Digital Input 8 Bit
Description	-
Data Type	Array

Index	5001.00
Name	Number of indexes supported
Description	
Data Type	Unsigned 8
Access	r/o
PDO Mapping	No
Value Range	-
Default Value	2

Time is set in ms.

Index	5001.01...5001.xx
Name	Digital Input Debounce Time
Description	
Data Type	Unsigned 16
Access	r/w
PDO Mapping	No
Value Range	0...100
Default Value	30

Index 6000: Read Digital Input 8 Bit

This index represents the values of the digital inputs.

Index	6000
Name	Digital Input 8 Bit
Description	-
Data Type	Array

Index	6000.00
Name	Number of indexes supported
Description	
Data Type	Unsigned 8
Access	r/o
PDO Mapping	No
Value Range	-
Default Value	-

Index	6000.01...6000.xx
Name	Digital Input 8 Bit
Description	
Data Type	Unsigned 8
Access	r/o
PDO Mapping	Yes
Value Range	-
Default Value	-

Index 6100: Read Digital Input 16 Bit

Same specifications as index 6000, only with 16-bit-access.

Index 6120: Read Digital Input 32 Bit

Same specifications as index 6000, only with 32-bit-access.

Index 6002: Polarity Input 8 Bit

With this index, the values of the digital inputs can be inverted.

Index	6002
Name	Polarity Input 8 Bit
Description	-
Data Type	Array

Index	6002.00
Name	Number of indexes supported
Description	
Data Type	Unsigned 8
Access	r/o
PDO Mapping	No
Value Range	-
Default Value	-

Index	6002.01...6002.xx
Name	Polarity Input 8 Bit
Description	
Data Type	Unsigned 8
Access	r/w
PDO Mapping	No
Value Range	-
Default Value	0

Index 6005: Global Interrupt Enable

This index enables a global interrupt without changing the setups of the interrupt masks. In event mode the values are transmitted depending on indexes 6006, 6007, 6008 und the transmission type.

TRUE (1) = interrupt enable
FALSE (0) = interrupt disable

Index	6005
Name	Global Interrupt Enable
Description	-
Data Type	Boolean
Access	r/w
PDO Mapping	No
Value Range	-
Default Value	TRUE

Index 6006: Interrupt Mask Any Change

This index gives whether an interrupt is created by any change. If enabled, both rising and falling edges are considered valid. Interrupts trigger PDO transmissions in event mode.

Index	6006
Name	Interrupt Mask any change
Description	-
Data Type	Array

Index	6006.00
Name	Number of indexes supported
Description	
Data Type	Unsigned 8
Access	r/o
PDO Mapping	No
Value Range	-
Default Value	-

1 = Interrupt enable
0 = Interrupt disable

Index	6006.01...6006.xx
Name	Interrupt Mask any change
Description	
Data Type	Unsigned 8
Access	r/w
PDO Mapping	No
Value Range	-
Default Value	0xFF (interrupt enabled)

Index 6007: Interrupt Mask Low to High

Same specifications as index 6006, but only rising edges are valid. Default is 0 (zero) (disabled).

Index 6008: Interrupt Mask High to Low

Same specifications as index 6006, but only falling edges are valid. Default is 0 (zero) (disabled).

DS401: digital outputs

Index 5200: Output Reset on Error

This index determines whether the outputs restore their original states after acknowledging and dealing with a critical error.

0 (zero) maintains the original states of index 6200.xx. In case of an error, the outputs are set according to indexes 6206 and 6207. After the error cleared, the states of index 6200.xx are restored.

1 and greater overwrites the outputs permanently. The original states are not restored, since index 6200.xx is overwritten with the safe-states of error handling.

Index	5200
Name	Output Reset on Error
Description	-
Data Type	Unsigned 8
Access	r/w
PDO Mapping	No
Value Range	-
Default Value	1

Index 6200: Write to Digital Output

With this index the digital outputs are set.

Index	6200
Name	Write to digital output
Description	-
Data Type	Array

Index	6200.00
Name	Number of indexes supported
Description	
Data Type	Unsigned 8
Access	r/o
PDO Mapping	No
Value Range	-
Default Value	-

Index	6200.01...6200.xx
Name	Write to digital output
Description	
Data Type	Unsigned 8
Access	r/w
PDO Mapping	Yes
Value Range	-
Default Value	0

Index 6300: Write Digital Output 16 Bit

Same specifications as index 6200, only with 16-bit-access.

Index 6320: Write Digital Output 32 Bit

Same specifications as index 6200, only with 32-bit-access.

Index 6206: Error Mode Output 8 Bit

With this is set, whether the outputs change to predefined states (index 6207) in case of an error.

Index	6206
Name	Error Mode Output 8 Bit
Description	-
Data Type	Array

Index	6206.00
Name	Number of indexes supported
Description	
Data Type	Unsigned 8
Access	r/o
PDO Mapping	No
Value Range	-
Default Value	-

1 = output changes according to index 6207
0 = output does not change

Index	6206.01...6206.xx
Name	Error Mode Output 8 Bit Byte 0
Description	
Data Type	Unsigned 8
Access	r/w
PDO Mapping	No
Value Range	-
Default Value	0xFF

Index 6207: Error Value Output 8 Bit

With this index, the error states for the outputs are predefined.

Index	6207
Name	Error Value Output 8 Bit
Description	-
Data Type	Array

Index	6207.00
Name	Number of indexes supported
Description	
Data Type	Unsigned 8
Access	r/o
PDO Mapping	No
Value Range	-
Default Value	-

0 = output disabled
1 = output enabled

Index	6207.01...6207.xx
Name	Error Value Output 8 Bit Byte 0
Description	
Data Type	Unsigned 8
Access	r/w
PDO Mapping	No
Value Range	-
Default Value	0 (Inactive, high level)

DS401: analog inputs

Index 5301: Axis Value Filter Time

This index sets the filter time for all axis.
Time is set in ms.

Index	5301
Name	Axis Value Filter Time
Description	
Data Type	Unsigned 16
Access	r/w
PDO Mapping	No
Value Range	0...20
Default Value	10

Index 5320: Axis Full-Scale Value

This index sets the full-scale value of all axis.

Index	5320
Name	Axis Full Scale Value
Description	
Data Type	Unsigned 16
Access	r/w
PDO Mapping	No
Value Range	100...32767
Default Value	-

Index 5380: Axis ADC Raw Data

This index gives the axis raw values directly from the analog-digital-converter.

Index	5380
Name	Axis ADC Raw Data
Description	-
Data Type	Array

Index	5380.00
Name	Number of indexes supported
Description	
Data Type	Unsigned 8
Access	r/o
PDO Mapping	No
Value Range	-
Default Value	6

Index	5380.01...5380.xx
Name	Axis ADC Raw Data x
Description	
Data Type	Unsigned 16
Access	r/o
PDO Mapping	Yes
Value Range	-
Default Value	-

Index 53F0: Axis Error

This index shows whether an axis error occurred or not.

Index	53F0
Name	Axis Error
Description	-
Data Type	Unsigned 8
Access	r/o
PDO Mapping	Yes
Value Range	
Default Value	

Index 6401: Read Analog Input

With this index, the analog inputs are read.

Index	6401
Name	Read Analog Input
Description	-
Data Type	Array

Index	6401.00
Name	Number of indexes supported
Description	
Data Type	Unsigned 8
Access	r/o
PDO Mapping	No
Value Range	-
Default Value	-

Index	6401.01...6401.xx
Name	Read analog input
Description	
Data Type	Signed 16
Access	r/o
PDO Mapping	Yes
Value Range	-
Default Value	-

Index 6421: Analog Input Interrupt Trigger

With this index, the user selects the trigger conditions.

Index	6421
Name	Analog Input Interrupt Trigger
Description	-
Data Type	Array

Index	6421.00
Name	Number of indexes supported
Description	
Data Type	Unsigned 8
Access	r/o
PDO Mapping	No
Value Range	-
Default Value	-

Bit 0: Input voltage greater than upper level
Bit 1: Input voltage less than lower level
Bit 2: Input changed more than delta
Bit 3: Input reduced more than negative delta
Bit 4: Input increased more than positive delta
Bit 5...7: reserved (must be forced to 0 (zero))

Index	6421.01...6421.xx
Name	Analog Input Interrupt Trigger
Description	
Data Type	Unsigned 8
Access	r/w
PDO Mapping	Yes
Value Range	-
Default Value	7

Index 6423: Analog Input Interrupt Enable

This index enables/disables the global interrupt for analog input signals.
Disabled by default, to avoid bus overloads because of analog transmissions.

1 (true): enabled
0 (false): disabled

Index	6423
Name	Analog Input Interrupt Enable
Description	
Data Type	Boolean
Access	r/w
PDO Mapping	No
Value Range	-
Default Value	0 (false)

Index 6424: Analog Input Upper Limit

With this index, the upper limits for analog interrupts are set (for signal >= limit).

Index	6424
Name	Analog Input Upper Limit
Description	-
Data Type	Array

Index	6424.00
Name	Number of indexes supported
Description	
Data Type	Unsigned 8
Access	r/o
PDO Mapping	No
Value Range	-
Default Value	-

Index	6424.01...6424.xx
Name	Analog Input Upper Limit
Description	
Data Type	Integer 32
Access	r/w
PDO Mapping	No
Value Range	-
Default Value	0

Index 6425: Analog Input Lower Limit

With this index, the lower limits for analog interrupts are set (for signal < limit).

Index	6425
Name	Analog Input Lower Limit
Description	-
Data Type	Array

Index	6425.00
Name	Number of indexes supported
Description	
Data Type	Unsigned 8
Access	r/o
PDO Mapping	No
Value Range	-
Default Value	-

Index	6425.01...6425.xx
Name	Analog Input Lower Limit
Description	
Data Type	Integer 32
Access	r/w
PDO Mapping	No
Value Range	-
Default Value	0

Index 6426: Analog Input Interrupt Delta

With this index, the signal changes (delta) for analog interrupts are set (any change at all, reducing or increasing).

Index	6426
Name	Analog Input Interrupt Delta
Description	-
Data Type	Array

Index	6426.00
Name	Number of indexes supported
Description	
Data Type	Unsigned 8
Access	r/o
PDO Mapping	No
Value Range	-
Default Value	-

Index	6426.01...6426.xx
Name	Analog Input Interrupt Delta
Description	
Data Type	Integer 32
Access	r/w
PDO Mapping	No
Value Range	-
Default Value	0

Index 6427: Analog Input Negative Delta

With this index, the negative signal changes (delta) for analog interrupts are set (reducing only).

Index	6427
Name	Analog Input Negative Delta
Description	-
Data Type	Array

Index	6427.00
Name	Number of indexes supported
Description	
Data Type	Unsigned 8
Access	r/o
PDO Mapping	No
Value Range	-
Default Value	-

Index	6427.01...6427.xx
Name	Analog Input Negative Delta
Description	
Data Type	Integer 32
Access	r/w
PDO Mapping	No
Value Range	-
Default Value	0

Index 6428: Analog Input Positive Delta

With this index, the positive signal changes (delta) for analog interrupts are set (increasing only).

Index	6428
Name	Analog Input Positive Delta
Description	-
Data Type	Array

Index	6428.00
Name	Number of indexes supported
Description	
Data Type	Unsigned 8
Access	r/o
PDO Mapping	No
Value Range	-
Default Value	-

Index	6428.01...6428.xx
Name	Analog Input Positive Delta
Description	
Data Type	Integer 32
Access	r/w
PDO Mapping	No
Value Range	-
Default Value	0

PWM

Index 5100: PWM LED Output Duty

This index sets the duty-cycle of the LED outputs (brightness).

Index	5100
Name	PWM LED Output Duty
Description	-
Data Type	Array

Activate PWM using the corresponding digital output (index 6200.01).

PWM is available for all I/O pins that are configured for output.

Index	5100.00
Name	Number of indexes supported
Description	
Data Type	Unsigned 8
Access	r/o
PDO Mapping	No
Value Range	-
Default Value	-

Duty-cycle is set in percent (%).

Index	5100.01...5100.04
Name	PWM LED Output Duty
Description	
Data Type	Unsigned 8
Access	r/w
PDO Mapping	Yes
Value Range	0...100
Default Value	100

JoBo configuration

Index 5F00: Joystick Axis Mode

Object 5F00 is used to set the operation mode for all analog input channels.

Index	5F00
Name	Joystick Axis Mode
Description	-
Data Type	Array

Index	5F00.00
Name	Number of indexes supported
Description	Maximum number of analog input channels
Data Type	Unsigned 8
Access	ro
PDO Mapping	No
Value Range	-
Default Value	6

Index	5F00.01...5F00.06
Name	Analog Input Channel Operation Mode
Description	-
Data Type	Unsigned 16
Access	rw
PDO Mapping	No
Value Range	-
Default Value	0

5F01.xx: Analog Input Channel Operation Mode:Bits															
15	14	13	12	11	10	9	8	7	6	5	4	3	2	1	0
IN								Mode							

Bit	Name	Function	
7...0	Mode	Operation mode for the selected channel	
		0	Analog input channel is unused. The associated data value for this channel is forced to 0
		1	Analog input channel is used as an axis. The 16 bit value range for objects 6401.xx is –Maximum...0...+Maximum The 8 bit value range for objects 6400.xx is –100...0...+100 (Maximum value for 16 bit value is set in object 5320 Analog input full scale value) The dead bands for zero position and joystick end positions are observed
		2	Analog input channel is used as a validation to an axis. With the validation channel, an axis can be validated. For the axis value, the axis channel and the validation channel are averaged. Only one data value is written to the object dictionary. The validation may be used to improve error detection of an axis or two support axes with dual poti or dual hall sensor chips. In order to set an axis with validation, the first channel must be set as axis and the next channel must be set as validation for an axis. The dead bands for zero position and joystick end positions are observed Example: Input 0 is set to MODE = 1 as an axis Input 1 is set to MODE = 2 as the validation channel. Input 2 is set to MODE = 1 as an axis Input 3 is set to MODE = 2 as the validation channel. The data value of object 6401.01 is calculated as 6401.01= (Value Input1 + Value Input2)/2 The data value of object 6401.02 is calculated as 6401.02= (Value Input3 + Value Input4)/2 The object dictionary shows only two axes.
		16	The analog input channel is used as a slider. The 16 bit value range for objects 6401.xx is 0...+Maximum The 8 bit value range for objects 6400.xx is 0...+100 (Maximum value for 16 bit value is set in object 5320 Analog input full scale value) The dead bands joystick end positions are observed. Dead band for zero center position is ignored.
15	IN	Invert Channel	
		0	Channel data is used without inversion
		1	Inversion of channel data

Index 5F02: Axis Dead Zone Center Position

Object 5F02 sets the dead zone for the center position of the joystick in % of the total value range.

If the joystick is moved within the dead zone, the analog value is forced to zero in order to avoid unwanted data output.
The value gives the total dead zone for both deflections. A value of 20 means that the joystick must be moved at least 10% from zero position in any direction in order to produce output data.

Index	5F02
Name	Axis Dead Zone Center Position
Description	-
Data Type	Unsigned 16
Access	rw
PDO Mapping	No
Value Range	0...40
Default Value	20

Index 5F03: Axis Dead Zone Edge Position

Object 5F03 sets the dead zone for the edge position (maximum deflection) of the joystick in % of the total value range.

Index	5F03
Name	Axis Dead Zone Edge Position
Description	-
Data Type	Unsigned 16
Access	rw
PDO Mapping	No
Value Range	0...10
Default Value	5

Index 5F04: Axis Full Scale Default Value

Object 5F04 is the default value for object 5320 that holds the full-scale value for the maximum deflection of the joystick.

Index	5F04
Name	Axis Full Scale Default Value
Description	-
Data Type	Unsigned 16
Access	rw
PDO Mapping	No
Value Range	0...0x7FFF
Default Value	1000

Index 5F08: Axis Calibration Info P

Index	5F08
Name	Axis Calibration Info P
Description	-
Data Type	Array

Index	5F08.00
Name	Number of indexes supported
Description	
Data Type	Unsigned 8
Access	r/o
PDO Mapping	No
Value Range	-
Default Value	-

Index	5F08.01...5F08.xx
Name	Axis Calibration Info P
Description	
Data Type	Unsigned 16
Access	r/o
PDO Mapping	No
Value Range	-
Default Value	-

Index 5F09: Axis Calibration Info Z

Index	5F09
Name	Axis Calibration Info Z
Description	-
Data Type	Array

Index	5F09.00
Name	Number of indexes supported
Description	
Data Type	Unsigned 8
Access	r/o
PDO Mapping	No
Value Range	-
Default Value	-

Index	5F09.01...5F09.xx
Name	Axis Calibration Info Z
Description	
Data Type	Unsigned 16
Access	r/o
PDO Mapping	No
Value Range	-
Default Value	-

Index 5F0A: Axis Calibration Info N

Index	5F0A
Name	Axis Calibration Info N
Description	-
Data Type	Array

Index	5F0A.00
Name	Number of indexes supported
Description	
Data Type	Unsigned 8
Access	r/o
PDO Mapping	No
Value Range	-
Default Value	-

Index	5F0A.01...5F0A.xx
Name	Axis Calibration Info N
Description	
Data Type	Unsigned 16
Access	r/o
PDO Mapping	No
Value Range	-
Default Value	-

Index 5F0C: Digital I/O Configuration

Object 5F0C sets the functionality for the digital IO channels.
Each bit represents an I/O channel and sets the functionality of this channel:
Bit = 0: Channel is input for push button etc.
Bit = 1: Channel is output for LED

Please note:
Channels 0 to 7 are always used as digital input channels regardless of the setting.
Configuration is only available for channels 8 to 11.

Index	5F0C
Name	Digital I/O Configuration
Description	-
Data Type	Unsigned 16
Access	rw
PDO Mapping	No
Value Range	
Default Value	0x0000 IN0...IN7: digital input IO8...IO11: digital input

Index 5F10: CAN Protocol

Object 5F10 enables different CAN protocols.
Each bit controls a CAN protocol.
Bit = 0: Protocol is disabled
Bit = 1: Protocol is enabled.

Bit0: CANopen enable/disable

If no valid protocol is enabled, the CANopen protocol is automatically enabled.

Index	5F10
Name	CAN Protocol
Description	-
Data Type	Unsigned 16
Access	rw
PDO Mapping	No
Value Range	
Default Value	1 (CANopen enabled)

Bit																Description
15	14	13	12	11	10	9	8	7	6	5	4	3	2	1	0	
															0	CANopen disabled
															1	CANopen enable

Index 5F20: CANopen Protocol Options

Object 5F20 enables various options for the CANopen protocol.
At this time, no options are available. In order to keep compatibility with future firmware versions it is strongly recommended to set this value to zero.

Index	5F20
Name	CANopen Protocol Options
Description	-
Data Type	Unsigned 16
Access	rw
PDO Mapping	No
Value Range	
Default Value	0

Bit																Description
15	14	13	12	11	10	9	8	7	6	5	4	3	2	1	0	
															0	CANopen standard NMT status change according to DS301
															1	CANopen status is always operational

Index 5F21: CANopen TPDO Default Mapping

Object 5F21 sets a default mapping for the TPDOs. With different default mappings, the JoBo2.0A may be adapted to different requirements of the CAN message data format.

Index	5F21
Name	CANopen TPDO Default Mapping
Description	-
Data Type	Unsigned 16
Access	rw
PDO Mapping	No
Value Range	
Default Value	0

Please note:
A default mapping may be overwritten by the CANopen master. A mapping may also be saved to the non-volatile memory by command using object 1010.

The following default mappings are available:

Mode 0

Mode	TPDO	No	Mapped Object	Description
0	1	1	0x6000.01	Digital input byte 1
		2	0x6000.02	Digital input byte 2
		3	0x53F0	Axis Error Register
	2	1	0x6401.01	Analog input channel 1 (16-bit value)
		2	0x6401.02	Analog input channel 2 (16-bit value)
		3	0x6401.03	Analog input channel 3 (16-bit value)
		4	0x6401.04	Analog input channel 4 (16-bit value)
	3	1	0x6401.05	Analog input channel 5 (16-bit value)
		2	0x6401.06	Analog input channel 6 (16-bit value)
	4			No mapped objects

Message layout for Mode 0

TPDO	Byte 0	Byte 1	Byte 2	Byte 3	Byte 4	Byte 5	Byte 6	Byte 7
TPDO1	Dig In Byte 1	Dig In Byte 2	Axis Error					
TPDO2	X-Axis: A-IN1 (16 bit)		Y-Axis: A-IN2 (16 bit)		Z-Axis: A-IN3 (16 bit)		W-Axis: A-IN4 (16 bit)	
TPDO3	U-Axis: A-IN5 (16 bit)		V-Axis: A-IN6 (16 bit)					

Mode 1

Mode	TPDO	No	Mapped Object	Description
1	1	1	0x6000.01	Digital input byte 1
		2	0x6000.02	Digital input byte 2
		3	0x6400.01	Analog input channel 1 (8-bit value)
		4	0x6400.02	Analog input channel 2 (8-bit value)
		5	0x6400.03	Analog input channel 3 (8-bit value)
		6	0x6400.04	Analog input channel 4 (8-bit value)
		7	0x6400.05	Analog input channel 5 (8-bit value)
		8	0x6400.06	Analog input channel 6 (8-bit value)
	2			No mapped objects
	3			No mapped objects
	4			No mapped objects

Message layout for Mode 1

TPDO	Byte 0	Byte 1	Byte 2	Byte 3	Byte 4	Byte 5	Byte 6	Byte 7
TPDO1	Dig In Byte 1	Dig In Byte 12	X-Axis A-IN1 (8 bit)	Y-Axis A-IN12 (8 bit)	Z-Axis A-IN3 (8 bit)	W-Axis A-IN4 (8 bit)	U-Axis A-IN5 (8 bit)	V-Axis A-IN6 (8 bit)

Mode 2

Mode	TPDO	No	Mapped Object	Description
2	1	1	0x6000.01	Digital input byte 1
		2	0x53F0	Axis Error Register
		3	0x6401.01	Average of Channels 1 and 2 as 16-bit value
		4	0x6401.02	Average of Channels 3 and 4 as 16-bit value
		5	0x6401.03	Average of Channels 5 and 6 as 16-bit value
	2			No mapped objects
	3			No mapped objects
	4			No mapped objects

Message layout for Mode 2

TPDO	Byte 0	Byte 1	Byte 2	Byte 3	Byte 4	Byte 5	Byte 6	Byte 7
TPDO1	Dig In Byte 1	Axis Error	X-Axis (Average A-IN1, AIN2)		Y-Axis (Average A-IN3, AIN4)		Z-Axis (Average A-IN5, AIN6)	

Mode 3

Mode	TPDO	No	Mapped Object	Description
2	1	1	0x6401.01	X-Axis: Average of Channels 1 and 2 as 16-bit value
		2	0x6401.02	Y-Axis: Average of Channels 3 and 4 as 16-bit value
		3	0x6401.03	Z-Axis: Average of Channels 5 and 6 as 16-bit value
		4	0x6000.01	Buttons: Digital input byte 1
		5	0x53F0	Axis Error Register
	2			No mapped objects
	3			No mapped objects
	4			No mapped objects

Message layout for Mode 3

TPDO	Byte 0	Byte 1	Byte 2	Byte 3	Byte 4	Byte 5	Byte 6	Byte 7
TPDO1	X-Axis (Average A-IN1, AIN2)		Y-Axis (Average A-IN3, AIN4)		Z-Axis (Average A-IN5, AIN6)		Dig In Byte 1	Axis Error

Additional Modes

Additional modes and customer specific default mappings are available on request.

Index 5F22: CANopen TPDO Default Event Time

Object 5F22 is used to set a default event time for all Transmit-PDOs. This event time configuration overwrites the CANopen draft standard settings in order to enable a customer setting.

Index	5F22
Name	CANopen TPDO Default Event Time
Description	-
Data Type	Array

Index	5F22.00
Name	Number of indexes supported
Description	Number of TPDOs
Data Type	Unsigned 8
Access	Ro
PDO Mapping	No
Value Range	-
Default Value	4

Index	5F22.01...5F22.04
Name	CANopen TPDO Default Event Time
Description	-
Data Type	Unsigned 16
Access	rw
PDO Mapping	No
Value Range	-
Default Value	0

Please note:
Object 5F22 is reserved for future implementations and is not supported in the actual firmware version.

Index 5FF0: JoBo Configuration Enable Object

Object 5FF0 enables read and write access to all other configuration objects listed within this manual.

In order to grant access to the configuration objects it is required to write
value 0x62616E65 (signature "enab")
to object 5FF0.

Index	5FF0
Name	JoBo Configuration Enable Object
Description	-
Data Type	Unsigned 32
Access	rw
PDO Mapping	No
Value Range	
Default Value	0

Index 5FF1: JoBo Configuration Command

Object 5FF1 to control the configuration and calibration process. A command is initiated by writing the command value to object 5FF1.
Access to object 5FF1 is only possible, if the enable signature is written to object 5FF0.

Index	5FF1
Name	JoBo Configuration Command
Description	-
Data Type	Unsigned 32
Access	wo
PDO Mapping	No
Value Range	
Default Value	0

The following commands are implemented:

Command Value	Command Signature	Command	Description
0x64736572	“resd”	Reset to Default	The JoBo2.0A resets the configuration data to default values and deletes calibration data. The new default values are not saved to non-volatile memory so it is possible to return to a valid configuration, if the JoBo2.0A is reset without having executed the command “Save Configuration”.
0x65766173	“save”	Save Configuration	The JoBo2.0A saves the actual configuration to non-volatile memory. The status of the configuration can be monitored in Object 5FFC. Please note on saving a new configuration, the calibration data is cleared, so after saving a configuration it is always needed to run a calibration process.
0x316C6163	“cal1”	Calibrate Step1	The JoBo2.0A starts the calibration process. Before starting the calibration process, all analog channels must be in zero position. After the command “Calibrate Step1” is issued, all analog channels must be moved to all end positions. It is recommended to move the handle at least 3 times to each end position. The status of the calibration can be monitored in Object 5FFC.
0x726C6163	“calr”	Calibrate Ready	The JoBo2.0A finishes the calibration process. After having moved all analog channels to all end positions, the command “Calibrate Ready” must be issued. The calibration is finished, the JoBo2.0A verifies the calibration data and saves them to non-volatile memory. The status of the calibration can be monitored in Object 5FFC.

Index 5FFC: Configuration Status

Object 5FFC shows the actual status of configuration and calibration.

Index	5FFC
Name	Configuration Status
Description	-
Data Type	Unsigned 16
Access	ro
PDO Mapping	No
Value Range	
Default Value	

Bit															
15	14	13	12	11	10	9	8	7	6	5	4	3	2	1	0
BSY						CAE	CFE							CAR	CFR

Bit	Txt	Function	Description
0	CFR	Configuration Ready	Indicates whether a configuration process is successfully completed and a valid configuration was saved to nonvolatile memory 1: Configuration data is valid and saved 0: Configuration data is not valid or not saved
1	CAR	Calibration Ready	Indicates whether a calibration process is successfully completed and valid calibration data was saved to nonvolatile memory 1: Calibration data is valid and saved 0: Calibration data is not valid or not saved
8	CFE	Configuration Error Flag	The flag indicates an error within configuration process The error flag is set, if the JoBo2.0A detects an error within configuration data or during saving to non-volatile memory. 1: Error 0: No error
9	CAE	Calibration Error Flag	The flag indicates an error within calibration process The error flag is set, if the JoBo2.0A detects an error within calibration data or during saving to non-volatile memory. 1: Error 0: No error
15	BSY	Busy Flag	Indicates whether the JoBo2.0A is working on a configuration or calibration process. 1: Configuration or calibration is active 0: No configuration or calibration active

Configuration example

Joystick with 2 axis redundant and 4 buttons (JoBo2.0A set to Node-ID 1)
selected axis mode: axis with validation channel,
selected TPDO-Default-Mapping: mode 2 (one telegram for both axis and buttons)

1. Connect joystick with JoBo2.0A according to connector assignment/wiring scheme.
2. Supply joystick/JoBo2.0A (in the following simply joystick) with power
3. Set joystick into mode „PRE-OPERATIONAL“
4. Send telegrams to joystick in the following order:

   a) Enable configuration (Index 5FF0, write „enab“):
   22 F0 5F 00 65 6E 61 62

   b) Set axis mode (Index 5F00.01...5F00.06, write to all sub-indexes):
   22 00 5F 01 01 00 00 00 (sub-index 1, axis 1 Mode 1 (axis value))
   22 00 5F 02 02 00 00 00 (sub-index 2, axis 2 Mode 2 (validation value))
   22 00 5F 03 01 00 00 00 (sub-index 3, axis 3 Mode 1 (axis value))
   22 00 5F 04 02 00 00 00 (sub-index 4, axis 4 Mode 2 (validation value))
   22 00 5F 05 00 00 00 00 (sub-index 5, axis 5 Mode 0 (disabled))
   22 00 5F 06 00 00 00 00 (sub-index 6, axis 6 Mode 0 (disabled))

   c) Set/select TPDO-Default-Mapping (Index 5F21):
   22 21 5F 00 02 00 00 00 (TPDO-Mode 2)

   d) Save configuration (Index 5FF1, write „save“):
   22 F1 5F 00 73 61 75 65

   e) Calibrate axis (Index 5FF1, write „cal1“)
   22 F1 5F 00 63 61 6C 31

   f) Move joystick at least 3 times in every main axis direction (maximum):
   3x in direction X+, next 3x in direction Y-, next 3x X-, next 3x Y+

   g) End calibration (Index 5FF1, write „calr“):
   22 F1 5F 00 63 61 6C 72

5. Reset joysticks (Reset Node (00 81 01) or disconnect/connect from/to power supply)

6. Ready, now set other parameters, e.g. Event-Time if necessary.

The state of set-up (configuration/calibration) is available at any time using index 5FFC (interesting between steps d) and e), likewise after step g) to check for correct set-up).

Emergency messages

All possible emergency messages of this device have the same structure as follows:

Byte							
0	1	2	3	4	5	6	7
EMY-Code		1001	0	JoBo2.0A-Code			

EMY-Code: Error code according to DS301
1001: Value of index 1001
JoBo2.0A-Code: Error code as unsigned 32-bit-value

JoBo2.0A-Code (hex)	Change		Description
	NMT	I/O	
1000 0000	X	X	Heartbeat Consumer Error
2000 0000			Node-Guarding Warning
3000 0000	X	X	Lifeguarding Error
4000 0000			CAN is in Error-Warning-State
8000 0000	X	X	Device was Bus-Off

The Node-Guarding warning has to be activated with index 2103.
If more than one error occurs, the messages are combined by using logic OR.
Some errors have to change the NMT state and/or cause a change of the output states. This behavior depends on the settings of index 1029.

The ID for emergency messages is fixed to 0x80 + Node-ID.

List of emergency messages:

A defined Heartbeat-Producer was not able to send the Heartbeat telegram.

Heartbeat Consumer Error							
30	81	01	00	00	00	00	10

The master is not able to do a RTR on the node.

Node-Guarding Warning							
30	81	01	00	00	00	00	20

The Lifeguarding time is up.

Life-Guarding Error							
30	81	11	00	00	00	00	30

The internal CAN module is in Error-Warning-State.

CAN is in Error-Warning-State							
00	81	01	00	00	00	00	40

Successful return from Bus-Off.

Return from Bus-Off							
40	81	01	00	00	00	00	80

I/O Mapping (quick reference)

12/4 digital inputs/outputs 6 analog inputs EDS file: FBE-JoBo-02-ModeXX.eds[1)]	
Mapping in object dictionary	
Index	mapped data
6000.01	Digital inputs 0...7
6000.02	Digital inputs 8...11
6200.01	Digital outputs 0...3
6401.01	Analog input 0
6401.02	Analog input 1
6401.03	Analog input 2
6401.04	Analog input 3
6401.05	Analog input 4
6401.06	Analog input 5

Default PDO Mapping	
PDO	mapped data
RPDO1	6200.01: digital outputs 0...3
RPDO2	5100.01: PWM LED 0 5100.02: PWM LED 1 5100.03: PWM LED 2 5100.04: PWM LED 3
TPDO1	6000.01: digital inputs 0...7 6000.02: digital inputs 8...11 53F0.00: axis error
TPDO2	6401.01: analog input 0 6401.02: analog input 1 6401.03: analog input 2 6401.04: analog input 3
TPDO3	6401.05: analog input 4 6401.06: analog input 5

[1)] XX: Mode no.

History

Version	Release date	Changes/Remarks
V2.850_R000	Okt/21/2020	First release
V2.850_R001	Nov/05/2020	Update: pics of JoBo2.0A (first page) Update: product name (JoBo2.0A → JoBo2.0A) Update: ordering information
V2.870_R000	Jan/28/2021	Update: Index 5100.04 Update: mapping list
V2.880_R000	Apr/29/2021	New: PWM is available for all output channels Change: Default vale for object 5F0C changed from 0x0F00 to 0x0000
V2.880_R001	May/10/2021	Some data sheet corrections
V2.880_R002	Dec/03/2021	Some data sheet corrections

TOC

General 1
Features 1
CANopen Features 1
Ordering information 1
Technical data 2
Connectors assignment 3
Connector X1 (supply/CAN) 3
Connector X3/X4/X5 (axis 0...5) 3
Connector X2 (buttons/LED) 3
Connector X6 (buttons) 3
Connector X7 (Firmware) 3
Configuration Dip-Switch 4
CAN Signal-LED 4
Dimensions 5
CANopen Object Dictionary 6
- DS301: global objects 6
- DS301: PDO Parameter objects 7
- Specific objects 8
- DS401: digital inputs 8
- DS401: digital outputs 8
- DS401: analog inputs 9
- PWM 9
- JoBo configuration 9

Object dictionary (description) 10
DS301: Global objects 10
- Index 0005 10
- Index 0006 10
- Index 0007 10
- Index 1000: Device Type 11
- Index 1001: Error Register 11
- Index 1002: Status Register 11
- Index 1005: COB-ID SYNC 12
- Index 1008: Device Name 12
- Index 1009: Hardware Version 12
- Index 100A: Software Version 12
- Index 100C: Guard Time 13
- Index 100D: Life Time Factor 13
- Index 100E: COB-ID Guard 13
- Index 1010: Store Parameter Field 14
- Index 1011: Restore Default Parameter 15
- Index 1014: COB-ID Emergency 16
- Index 1015: Inhibit Time Emergency 16
- Index 1016: Consumer Heartbeat Time 17
- Index 1017: Producer Heartbeat Time 17
- Index 1018: Identity Object 18
- Index 1029: Error Behavior 19

DS301: PDO Parameter Objects 20
- Communication Parameter Objects 20
- PDO mapping objects 22

Specific Objects 24

Index 2000: Device Manufacturer 24
Index 2009: Serial Number 64 Bit 24
Index 2101: System Configuration 25
Index 2102: Remapping Enabled Info 25
Index 2103: Enabled Guarding Warning 25
Index 2105: Internal Error Code 25
Index 2110: Test Object 26
Index 2180: CAN Restart Time 26
Index 2FFF: Factory Test Object 26

DS401: digital inputs 27

Index 5001: Digital Input Debounce Time 27
Index 6000: Read Digital Input 8 Bit 28
Index 6100: Read Digital Input 16 Bit 28
Index 6120: Read Digital Input 32 Bit 28
Index 6002: Polarity Input 8 Bit 29
Index 6005: Global Interrupt Enable 29
Index 6006: Interrupt Mask Any Change 30
Index 6007: Interrupt Mask Low to High 30
Index 6008: Interrupt Mask High to Low 30

DS401: digital outputs 31

Index 5200: Output Reset on Error 31
Index 6200: Write to Digital Output 31
Index 6300: Write Digital Output 16 Bit 31
Index 6320: Write Digital Output 32 Bit 31
Index 6206: Error Mode Output 8 Bit 32
Index 6207: Error Value Output 8 Bit 32

DS401: analog inputs 33

Index 5301: Axis Value Filter Time 33
Index 5320: Axis Full-Scale Value 33
Index 5380: Axis ADC Raw Data 34
Index 53F0: Axis Error 34
Index 6401: Read Analog Input 35
Index 6421: Analog Input Interrupt Trigger 35
Index 6423: Analog Input Interrupt Enable 36
Index 6424: Analog Input Upper Limit 36
Index 6425: Analog Input Lower Limit 37
Index 6426: Analog Input Interrupt Delta 37
Index 6427: Analog Input Negative Delta 38
Index 6428: Analog Input Positive Delta 38

PWM 39

Index 5100: PWM LED Output Duty 39

JoBo configuration 40

Index 5F00: Joystick Axis Mode 40
Index 5F02: Axis Dead Zone Center Position 42
Index 5F03: Axis Dead Zone Edge Position 42
Index 5F04: Axis Full Scale Default Value 42
Index 5F08: Axis Calibration Info P 43
Index 5F09: Axis Calibration Info Z 43
Index 5F0A: Axis Calibration Info N 44
Index 5F0C: Digital I/O Configuration 44
Index 5F10: CAN Protocol 45
Index 5F20: CANopen Protocol Options 45

Index 5F21: CANopen TPDO Default Mapping 46
Index 5F22: CANopen TPDO Default Event Time 49
Index 5FF0: JoBo Configuration Enable Object 49
Index 5FF1: JoBo Configuration Command 50
Index 5FFC: Configuration Status 51
Configuration example 52
Emergency messages 53
List of emergency messages: 53
I/O Mapping (quick reference) 54
History 55
TOC 56